Propane Construction Heater

USER'S INSTALLATION, OPERATION AND MAINTENANCE MANUAL
MODELS:

LPC25	**(PROPANE, 25,000 BTU/hr)**
LPC80	**(PROPANE, 80,000 BTU/hr)**
LPC200	**(PROPANE, 200,000 BTU/hr)**

C US

ANS Z83.7-2011 CSA 2.14-2011

Adequate ventilation must be provided.

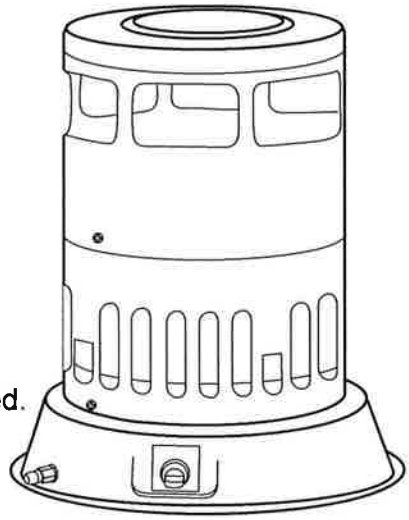

GENERAL HAZARD WARNING:

Failure to comply with the precautions and instructions provided with this heater, can result in death, serious bodily injury and property loss or damage from hazards of fire, explosion, burn, asphyxiation, carbon monoxide poisoning and/or electrical shock.

Only persons who can understand and follow the instructions should use or service this heater.

If you need assistance or heater information such as an instruction manual, labels, etc., contact the manufacturer.

CALIFORNIA PROPOSITION 65:

Fuels used in gas or oil fired appliances and the products of combustion of such fuels, contain chemicals known to the State of California to cause cancer, birth defects or other reproductive harm. This product contains chemicals, including lead and lead compounds, known to the State of California to cause cancer, birth defects or other reproductive harm. ***Wash hands after handling.***

Made by
World Marketing of America, Inc.
PO Box 192, 12256 William Penn Hwy.
Mill Creek PA 17060-0192
(Tel) 1-800-776-9425
www.worldmkting.com

CONSUMER: RETAIN THIS MANUAL FOR FUTURE REFERENCE.

Printed in China

IMLPCDH - GBQ

NEVER LEAVE THE HEATER UNATTENDED WHILE BURNING!

Table of Contents

Specifications 2
Safety Information 3
Theory of Operation 4
Ventilation 4
Assembly 5
Operation 6
- Lighting/Operating Instructions RMC-LPC25Series / RMC-LPC80 Series 6
- Lighting/Operating Instructions RMC-LPC200 Series 7

Troubleshooting 7
Maintenance 8
Replacement Parts 8
- Replacement Parts Illustration RMC-LPC25 Series 9
- Replacement Parts List 9
- Replacement Parts Illustration RMC-LPC80 Series 10
- Replacement Parts List 10
- Replacement Parts Illustration RMC-LPC200 Series 11
- Replacement Parts List 11

Warranty 12

IMPORTANT: Read and understand this manual before assembling, starting or servicing heater. Improper use of heater can cause serious injury. Keep this manual for future reference.

WARNING: Using this heater in a residential garage requires that the heater is positioned so that it is protected against any possible damage by a moving vehicle, etc. It must be positioned so that the base of the heater is no less than 18 in (450 mm) above the garage floor or 8 ft (2450 mm) in repair garages. The heater must be placed on a stable surface. Do not place it on a chair, ladder, etc. Raising the heater will reduce BUT NOT eliminate the possibility of lighting the vapor of any flammable liquids which may be improperly stored or accidentally spilled. If the smell of gasoline is present, DO NOT operate this heater until the area has been properly ventilated.

WARNING: CONSTRUCTION HEATERS ARE NOT FOR USE IN GARAGES IN CANADA.

WARNING: Fire, burn, inhalation and explosion hazard. Keep solid combustibles, such as building materials, paper or cardboard, a safe distance away from the heater as recommended by the instructions. Never use the heater in spaces which do or may contain volatile or airborne combustibles or products such as gasoline, solvents, paint thinner, dust particles or unknown chemicals.

WARNING: Not for home or recreational vehicle use.

Specifications

Convection Heater

Fuel Type ..... Propane Vapor Only
Ignition Type LPC25/LPC80/LPC200Piezo
Minimum Operating Temperature ..... -20°F (-29°C) Surrounding Air

NEVER LEAVE THE HEATER UNATTENDED WHILE BURNING!

Specifications

Model #	Rating (BTU/hr.)		Fuel Consumption (lb/h)		Supply Pressure		Manifold Pressure	Ignitor Gap (Inch)	Size (Inch)
	High	Low	Minimum	Maximum	Maximum	Minimum	High		
LPC25 Series	25,000	15,000	0.7 (0.32 kg/h)	1.16 (0.53 kg/h)	Bottle pressure	5psi	11.0" w.c.	.196 (4.98 mm)	11.7 x 12.87 (29.69 x 32.79 cm)
LPC80 Series	80,000	50,000	2.32 (1.05 kg/h)	3.71 (1.68 kg/h)	Bottle pressure	5psi	11.0" w.c.	.196 (4.98 mm)	15.9 x 18.3 (40.41 x 46.99 cm)
LPC200 Series	200,000	50,000	2.32 (1.05 kg/h)	9.28 (4.21 kg/h)	Bottle pressure	12psi	10psi	.196 (4.98 mm)	15.9 x 26.2 (40.41 x 66.49 cm)

Safety Information

The heater is designed for use as a construction heater in accordance with ANSI Z83.7, CSA 2.14. Other standards govern the use of fuel gases and heating products for specific uses. Your local authority can advised you about these. The primary purpose of construction heaters is to provide temporary heating of building under construction, alteration or repair. Properly used, the heater provides safe economical heating. Products of combustion are vented into the area being heated.

We cannot foresee every use which may be made of our heaters. **CHECK WITH YOUR LOCAL FIRE SAFETY AUTHORITY IF YOU HAVE QUESTIONS ABOUT HEATER USE.**

Other standards govern the use of fuel gases and heat producing products for specific uses. Your local authorities can advise you about these.

Carbon monoxide poisoning: Some people are more affected by carbon monoxide than others. Early signs of carbon monoxide poisoning resemble the flu, with headaches, dizziness and/or nausea. If you have these signs, the heater may not be working properly. **Get fresh air at once!** Check for proper ventilation and have heater serviced.

Propane gas: Propane gas is odorless. An odor-making agent is added to propane gas. The odor helps you detect a propane gas leak. However, the odor added to propane gas may fade. Propane gas may be present even though no odor exists.

Make certain you read and understand all Warnings. Keep this manual for reference. It is your guide to safe and proper operation of this heater.

- Install and use heater with care. Follow all local ordinances and codes. In the absence of local ordinances and codes refer to the Standard for Storage and Handling of Liquefied Petroleum Gas, ANSI/NFPA 58 and the Natural Gas Installation Code, CSA B149.1. This instructs on the safe storage and handling of propane gas.
- Use only propane gas set up for vapor withdrawal.
- Provide adequate ventilation. Before using heater, provide at least a six-square-foot opening of fresh, outside air. This heater produces carbon monoxide, which is listed by the State of California as a reproductive toxin under Proposition 65.
- For indoor or outdoor use.
- Do not use heater in occupied dwellings or in living or sleeping quarters.
- Do not use heater in a basement or below ground level. Propane gas is heavier than air. If a leak occurs, propane gas may sink to the lowest possible level.
- Keep appliance area clear and free from combustible materials, gasoline, paint thinner and other flammable vapors and liquids. Dust is combustible. Do not use heater in areas with high dust content.
- The heater must be located at least 6 ft. (1.83 m) in the U.S.; or (ii) 10 ft. (3 m) in Canada, from any propane gas container.

CLEARANCE TO COMBUSTIBLES:

MODEL	RMC-LPC25	RMC-LPC80	RMC-LPC200
Sides	2 ft. (60 cm)	2 ft. (60 cm)	3 ft. (91 cm)
Top	4 ft. (1.22 m)	5 ft. (1.52 m)	6 ft. (1.82 m)

- Keep propane tank(s) below 100°F (37.8 °C).
- Check heater for damage before each use. Do not use a damaged heater.
- Use only the hose and factory preset regulator provided with the heater.
- Check hose before each use of heater. If highly worn or cut, replace with hose specified by manufacturer before using heater.
- Do not alter heater. Keep heater in its original state.
- Do not use heater if altered.
- Locate heater on stable and level surface if heater is hot or operating.
- Not intended for use on finished floors.
- Never block air inlet (bottom of shell) or air outlet (around top of shell) of heater.
- Do not leave heater unattended.
- Keep children and animals away from heater.
- Never move, handle or service a hot or operating heater. Severe burns may result. Wait 15 minutes after turning heater off.
- To prevent injury, wear gloves when handling heater.
- Turn off propane supply to heater when not in use.
- Use only original replacement parts. This heater must use design-specific parts. Do not substitute or use generic parts. Improper replacement parts could cause serious or fatal injuries.

NEVER LEAVE THE HEATER UNATTENDED WHILE BURNING!

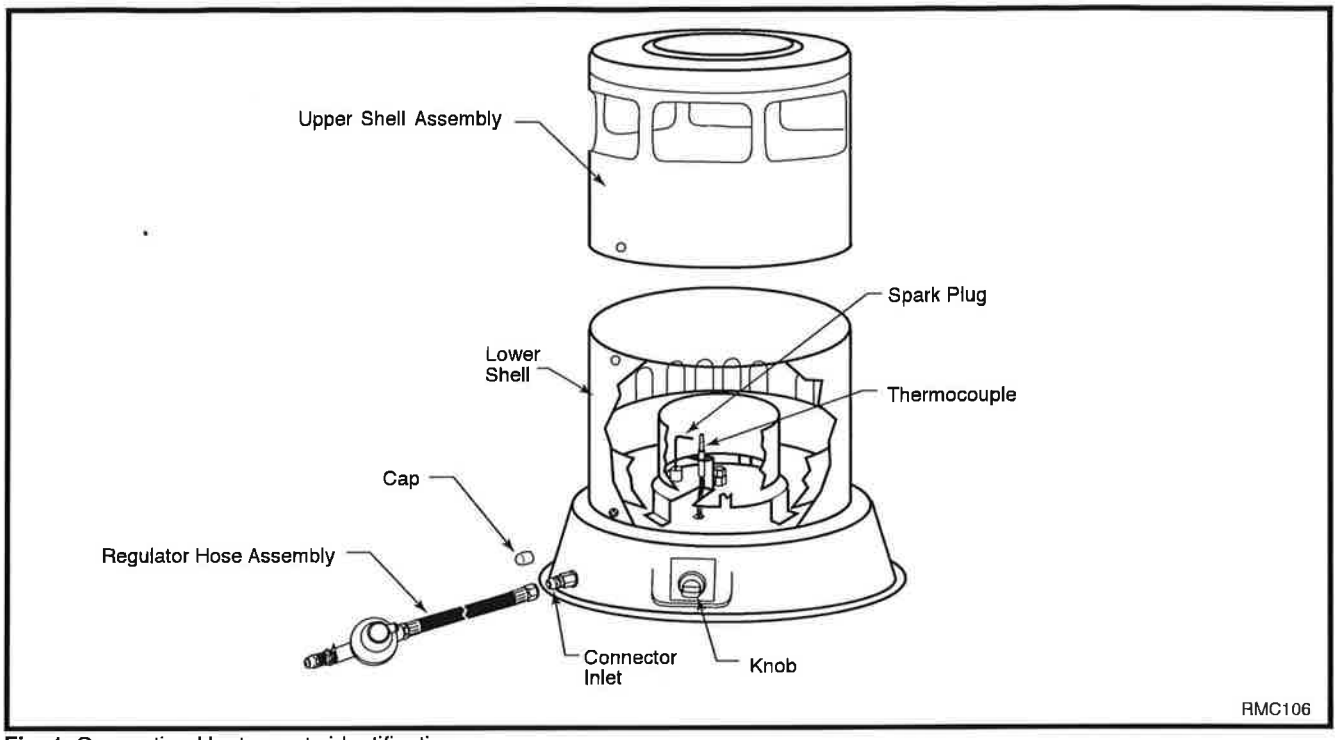

Fig. 1 Convection Heater parts identification.

Theory of Operation

The Fuel System: The hose/regulator assembly attaches to the propane gas supply. This provides fuel to the heater.

The Ignition System: The piezo ignitor lights the burner fuel supply on the LPC25/80. The piezo ignites a pilot burner on the LPC200.

The Automatic Control System: The automatic control valve shuts off the heater if the flame goes out.

Propane Supply

You must provide propane gas and tank(s).

Use this heater only with a propane vapor withdrawal supply system. Installation must conform to local codes or, in the absence of local codes, with the standard for the Storage and Handling of Liquefied Petroleum Gases ANSI/NFPA 58 and the Natural Gas and Propane Installation Code CSA B149.1. Your local library or fire department will have this booklet.

The amount of propane gas ready for use from propane tanks varies. Two factors decide this amount:

1. The amount of liquid propane gas in tank(s).
2. The temperature of tank(s).

The chart below shows the minimum number of 100-pound tanks or one larger tank may be needed in colder weather. Your local propane gas dealer will help you select the proper supply system.

Average Temp (°F) at Tank Location	Number of Tanks (100 lb.)		
	LPC25	LPC80	LPC200
60 °F (15.56 °C)	1	1	2
40 °F (4.44 °C)	1	1	2
32 °F (0 °C)	1	1	2
20 °F (-6.67 °C)	1	1	2
10 °F (-12.22 °C)	1	2	3
0 °F (-17.78 °C)	1	2	3

Ventilation

RMC-LPC25/80

WARNING: Provide at least a 2½ square feet (.23 square meters) opening of fresh, outside air while running heater. If proper fresh, outside air ventilation is not provided, carbon monoxide poisoning can occur. Provide proper fresh, outside air ventilation before running heater.

RMC-LPC200

WARNING: Provide at least a 6 square feet (.56 square meters) opening of fresh, outside air while running heater. If proper fresh, outside air ventilation is not provided, carbon monoxide poisoning can occur. Provide proper fresh, outside air ventilation before running heater.

Fresh Outside Air Opening Requirements

Heater Size	Opening
80,000 BTU/hr	2.5 ft^2 (.23 m^2)
200,000 BTU/hr	6 ft^2 (.56 m^2)

Assembly

Assembly Time: 10 minutes

Contents

All Models: Unit, Manual, Hose and Regulator Assembly

LPC80 and 200 Series Include:
Upper Shell, Lower Shell and Hardware Kit With Screws (8)

Tools Required for Assembly

All Models: Adjustable Wrench
LPC80 and LPC200 Series: Phillips head screwdriver

Heater Assembly

1. Remove all packing items applied to heater for shipment. Keep plastic cover caps (attached to connector inlet and regulator hose assembly) for storage.
2. Remove all items from carton and check for shipping damage. If heater is damaged, promptly inform dealer where you purchased the heater.

CAUTION: Do not attempt to light heater until fully assembled.

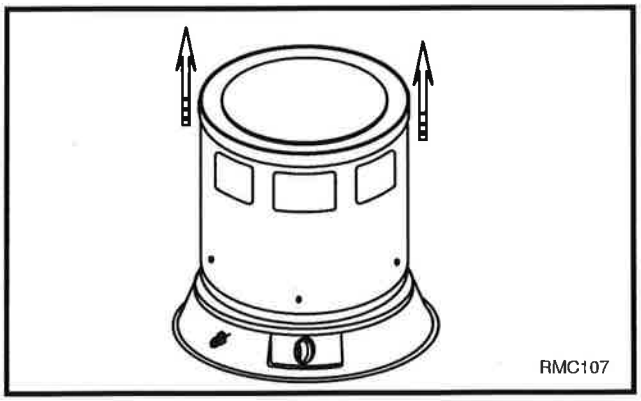

Fig. 2 Slide upper shell assembly up and off lower shell.

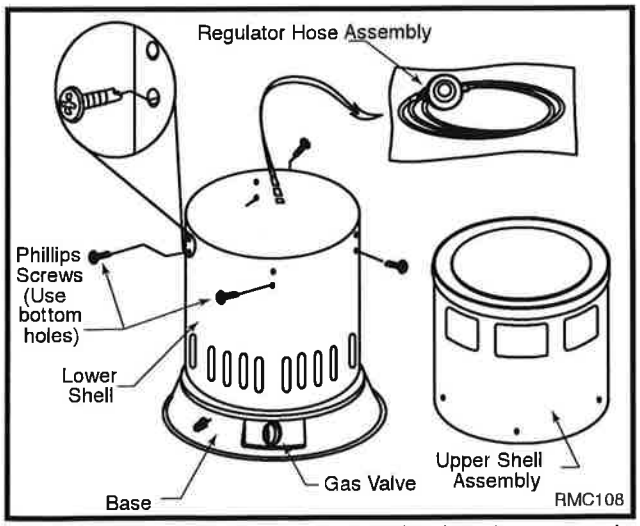

Fig. 3 Remove regulator hose assembly, place four screws in bottom holes at top of lower shell.

3. Slide upper shell assembly up and off lower shell. LPC80/200 (Fig. 2)
4. Remove regulator hose assembly bag from inside base.
5. Screw four phillips head screws in place in bottom hole at top of lower shell. LPC80/200 (Fig. 3)
6. Place upper shell assembly onto shell lower. Secure with four phillips screws in top hole of lower shell. (Fig. 4)

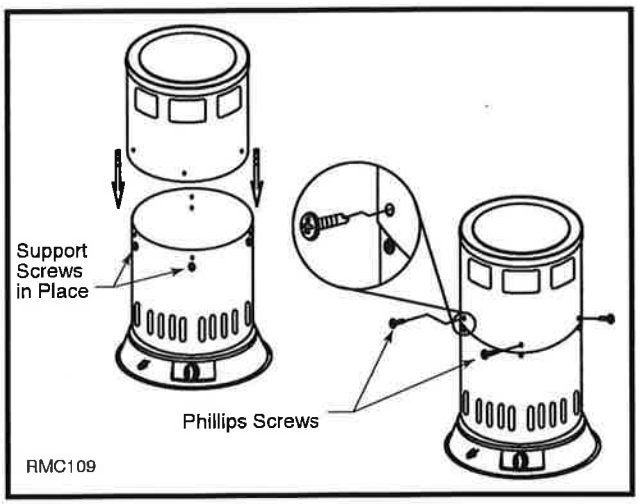

Fig. 4 Attach top with four phillips screws.

7. Provide propane supply system. (Refer to Propane Supply on Page 3)
8. Connect fuel gas fittings on regulator hose assembly to propane tank(s). Turn fuel gas fitting counterclockwise into threads on tank. Tighten firmly using a wrench. **IMPORTANT:** Tighten regulator with vent pointing down. Pointing vent down protects regulator from weather damage. (Fig. 5)
9. Connect hose to the connector inlet. (Fig. 6) Use a wrench to prevent connector inlet on heater from turning as you tighten firmly using a wrench. You must use the regulator supplied with heater even if propane tank has one.

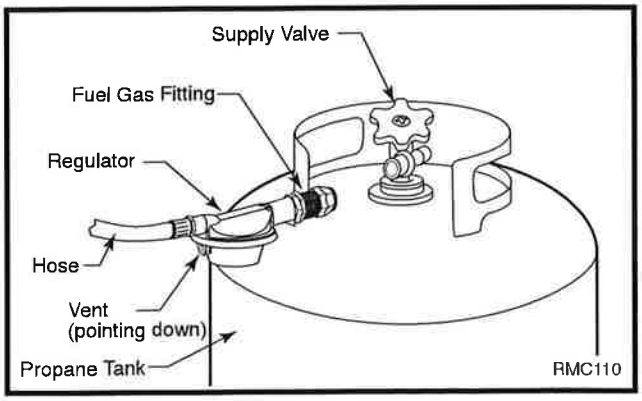

Fig. 5 Attach regulator with vent pointing down.

NEVER LEAVE THE HEATER UNATTENDED WHILE BURNING!

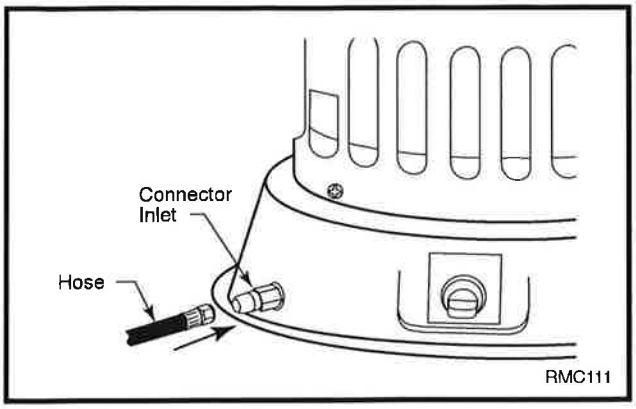

Fig. 6 Hose and connector inlet.

10. Open propane supply valve on propane tank(s) slowly. **NOTE:** If not opened slowly, excess-flow check valve on propane tank may stop gas flow. If this happens, you may hear a click inside the regulator assembly, this is the check valve closing. To reset the excess-flow check valve, close propane supply valve and open it again slowly.

11. Check all connections for leaks. Apply mixture of liqud soap and water to gas joints. Bubbles forming show a leak that must be corrected before using the heater.

Close propane supply valve.

Operation

WARNING: Review and understand the warnings in the Safety Information section on page 3. They are needed to safely operate this heater. Follow all local codes when using this heater.

Lighting/Operating Instructions RMC-LPC25/80

CAUTION

Due to high surface temperature, keep children, clothing and furniture away.

Keep burner and control compartment clean.

This heater shall not be installed in a bedroom or a bathroom.

WARNING

Hot while in operation: Do not touch. Keep children, clothing, furniture, gasoline and other liquids having flammable vapors away.

NOTE: On completing the gas line connection, a small amount of air will be trapped in the gas line. When you first light the unit with the pilot light, it is possible that it will take a few minutes to purge the trapped air. Once you have purged the gas line, the pilot and burner will light and operate normally. Subsequent lightings of the appliance will not require purging the gas line.

1. **Stop!** Read the safety information on side of heater.
2. Turn control knob clockwise ↷ to "OFF"(○)position.
3. Turn propane supply valve on by turning tank valve counterclockwise ↶.
4. Depress control knob and turn counterclockwise ↶ to "LOW/IGN" position to light burner.
5. If burner does not light, turn knob to the "OFF"(○) position and repeat Step 4. Keep control knob depressed for approximately 10 to 15 seconds, release control knob.
6. If flame burner goes out, wait 5 minutes then repeat steps 4 and 5.
7. With burner operating, the control knob may be turned counterclockwise ↶ to desired heating level between"LOW"and"HIGH."

To Turn Off Appliance

1. Turn control knob clockwise ↷ to "OFF" ○ position.
2. Turn propane supply valve off by turning fully clockwise ↷.

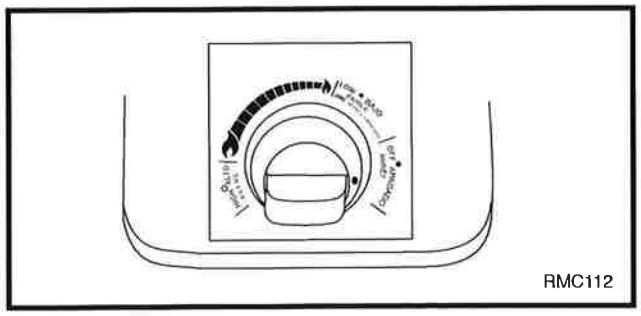

Fig. 7 Convection Heater control knob.

NEVER LEAVE THE HEATER UNATTENDED WHILE BURNING!

Lighting/Operating Instructions RMC-LPC200

WARNING: BEFORE LIGHTING PILOT, close main burner valve (by rotating the handle clockwise).

Start: Read Safety Information before starting the heater.

1. Fully open the valve on the propane cylinder counter clockwise and wait 15 seconds before proceeding to step 2.
2. Depress the red button on safety pilot valve admitting gas to the pilot. Push and release the ignition button until the pilot lights.
3. When the pilot lights, continue to hold button depressed for the 30 seconds then release.
4. If pilot goes out, wait 5 minutes and repeat lighting procedure.
5. When the pilot remains lit, open main burner valve to operate heater. Partially close valve to regulate heat output.

STOP:

1. Securely close valve on the propane cylinder.
2. Close main burner valve.

RESTART AFTER SAFETY SHUTDOWN

1. Securely close valve at propane cylinder.
2. Wait 5 minutes.
3. Restart following "Start" procedure.

Troubleshooting

RMC-LPC25/80/200 Propane Convection Heater

WARNING: Never attempt to service heater while it is connected, operating or hot. Severe burns can occur.

Symptom	Possible Cause	Remedy
Burner fails to light	1. Propane supply valve closed on propane tank(s). 2. Excess-flow check valve closed. 3. Blockage in burner nozzle. 4. Piezo ignition system not sparking.	1. Open propane supply valve slowly. 2. Close propane supply valve on propane tank and reopen slowly. 3. Replace burner nozzle. 4. Check to assure ignitor electrode gap is .196" (4.98 mm). Check wire lead for damage.
Burner lights but goes out when automatic control valve button is released	1. Not enough warm-up time. 2. Low gas pressure. 3. Thermocouple loose or needs to be replaced. 4. Automatic control valve needs to be replaced.	1. Relight, hold automatic control valve button in 45 seconds. 2. Check propane tank(s) for proper gas supply. 3. Tighten connection or replace thermocouple. 4. Replace automatic control valve.
Burn rate is low	1. Main burner valve not fully open. 2. Plugged gas orifices. 3. Low gas pressure. 4. Low fuel supply.	1. Fully open main burner valve by turning control knob towards HIGH position until it stops. 2. Replace gas orifice. 3. Check gas supply; check regulator output. 4. Consult propane gas supplier.

NEVER LEAVE THE HEATER UNATTENDED WHILE BURNING!

Maintenance

WARNING: Never attempt to service heater while it is connected to propane supply, operating or hot. Severe burns can occur.

1. Keep heater clean.
2. Inspect heater before each use. Check connections for leaks. Apply mixture of liquid soap and water to connections. Bubbles forming show a leak that must be corrected. Correct all leaks at once.
3. Inspect regulator hose assembly before each use. If hose is highly worn or cut, replace with hose specified by manufacturer.
4. Have heater inspected yearly by a qualified service person.

Storage

CAUTION: Disconnect heater from propane supply tank(s).

1. Store propane tank(s) in safe manner. Refer to Chapter 5 of Standard for Storage and handling of Liquefied Petroleum Gases, ANSI/NFPA 58, and the Natural Gas and Propane Installation Code CSA B149.1. Follow all local codes. Always store propane tanks outdoors.
2. Place plastic cover caps over brass fittings on connector inlet and regulator hose assembly.
3. Store in a dry, clean and safe place.

Replacement Parts

Warning: Use only original replacement parts. This Heater must use design-specific parts. Do not substitute or use generic parts. Improper replacement parts could cause serious or fatal injuries.
This will also protect your warranty coverage for parts replaced under warranty.
Parts warranty and non-warranty: Contact authorized dealers of this product. If they can not supply original replacement part(s), either contact your nearest Parts Central or World Marketing of America at 1-800-776-9425.

When calling World Marketing, have ready:

- your name
- your address
- how heater was malfunctioning
- serial number of heater
- model number of heater
- replacement part number

NEVER LEAVE THE HEATER UNATTENDED WHILE BURNING!

Replacement Parts for RMC-LPC25 Series

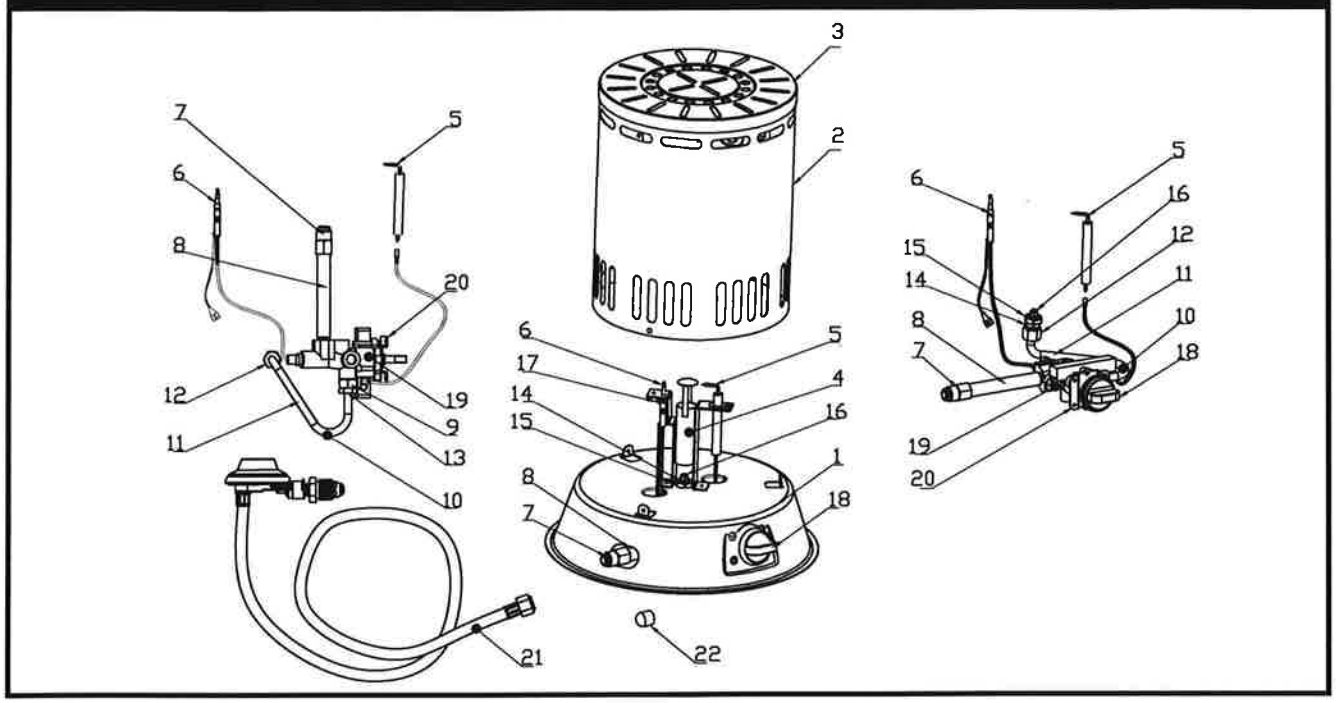

Replacement Parts List

GHP Group Inc., reserves the right to make changes in design, materials, specifications, prices and discontinue colors and products at any time, without notice.

Ref. No	Description	Quantity	RMC-LPC25
1.	Base	1	CFM25.00-01A
2.	Outer Shell	1	CFM25.01-01
3.	Cap	1	CFM25.01-02
4.	Burner Assy	1	CFM25.02
5.	Ignitor Electrode	1	CFM25.09-04B
6.	Thermocouple	1	1130/1396/210
7.	Inlet Fitting	1	CFM25.03
8.	Gas Inlet Tube	1	CFM25.04
9.	Elbow Fitting	1	CFM40.15
10.	Main Gas Tubing	1	CFM25.05
11.	Main Gas Tube	1	CFM25.05
12.	Lock Nut	1	CFM80.04-02
13.	Valve Nut	1	CFM80.04-03
14.	Nozzle Holder	1	CFM25.07
15.	Nozzle Fix Nut	1	CFM25.10
16.	Nozzle	1	CFM25.06
17.	Pilot Mounting	1	CFM40.07-01
18.	Knob	1	CFM80.00-10
19.	Valve Assy	1	GS22 (LPC25)
20.	Bracket	1	CFM80.03-01
21.	Regulator & Hose Assy 10' (3.05 m)	1	KR-106-01 (POL-3000)
	Regulator & Hose Assy 15' (4.57 m)	1	KR-106-01 (POL-4600)
22.	Inlet Cap	1	SPC-80VCB.006BZH
	AVAILABLE PARTS NOT SHOWN		
23.	Screw	2	M4*7
24.	Screw-Tapping Screw	4	ST4.2*6.6
25.	Screw	7	ST4.2*9

WARNING: Use only original replacement parts. This heater must use design-specific parts. Do not substitute or use generic parts. Improper replacement parts could cause serious or fatal injuries. This will also protect your warranty coverage for parts replaced under warranty.

Replacement Parts for RMC-LPC80 Series

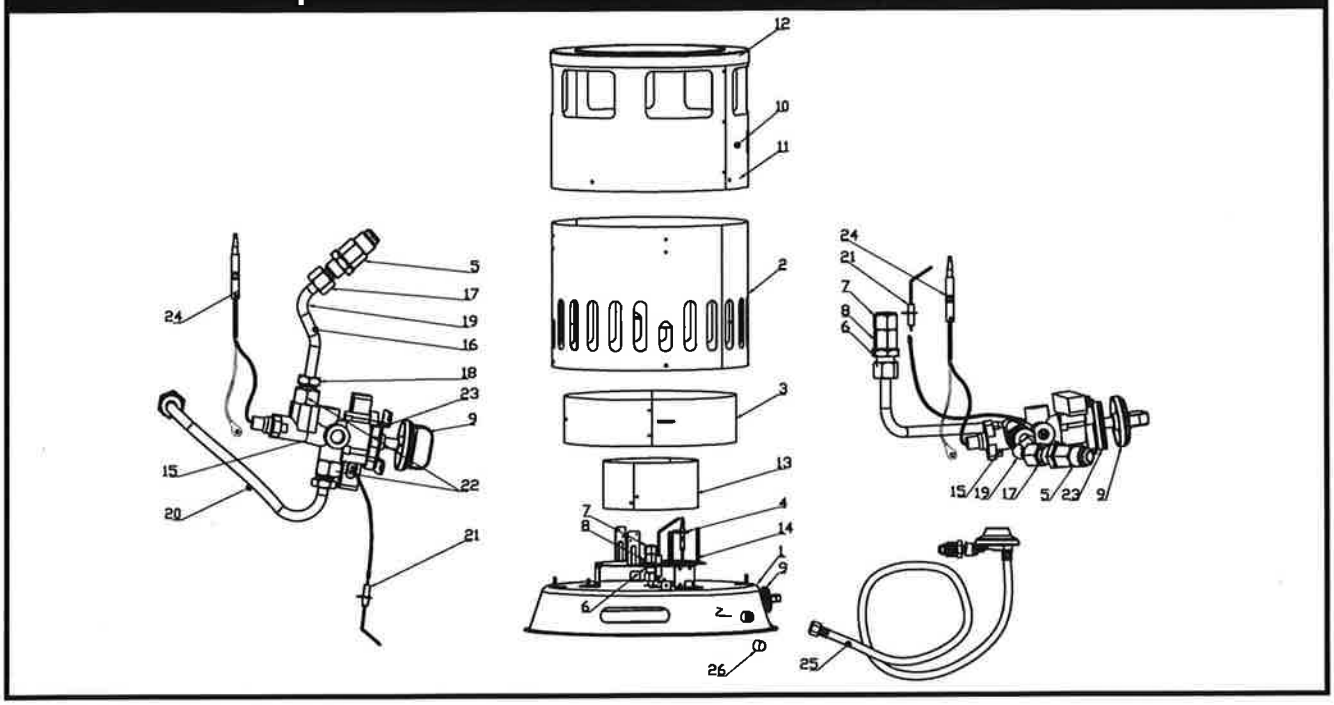

Replacement Parts List

GHP Group Inc., reserves the right to make changes in design, materials, specifications, prices and discontinue colors and products at any time, without notice.

Ref. No	Description	Quantity	RMC-LPC80
1.	Base	1	CFM80.00-01A
2.	Lower Shell	1	CFM80.00-02
3.	Inner Shell	1	CFM80.00-03
4.	Pilot Mounting	1	CFM80.00-05
5.	Inlet Fitting	1	CFM80.00-06
6.	Fix Nut	2	CFM80.00-07A
7.	Nozzle	1	CFM80.00-08
8.	Nozzle Holder	1	CFM80.00-09
9.	Knob	1	CFM80.00-010
10.	Upper Shell Assy	1	CFM80.01
11.	Upper Shell	1	CFM80.01-01
12.	Cap	1	CFM80.01-02
13.	Burner Ring	1	CFM80.02-02
14.	Burner Bracket	1	CFM80.02-01
15.	Valve Assy	1	GS22 (LPC80)
16.	Gas Inlet Tubing	1	CFM80.04
17.	Locked Nut	1	CFM80.04-02
18.	Valve Nut	1	CFM80.04-03
19.	Gas Inlet Tube	1	CFM80.04
20.	Main Gas Tubing	1	CFM80.05
21.	Ignitor Electrode	1	CFM80.06B
22.	Elbow Fitting	2	CFM40.15
23.	Bracket	1	CFM80.03-01
24.	Thermocouple	1	1130/1396-210
25.	Regulator & Hose Assy 10' (3.05 m)	1	GR-109 (POL-3000)
	Regulator & Hose Assy 15' (4.57 m)	1	GR-109 (POL-4600)
26.	Inlet cap	1	SPC-80VCB.006BZH
	AVAILABLE PARTS NOT SHOWN		
27.	Screw	2	M4*7
28.	Self-Tapping Screw	4	ST4.2*6.6
29.	Screw	15	ST4.2*9

WARNING: Use only original replacement parts. This heater must use design-specific parts. Do not substitute or use generic parts. Improper replacement parts could cause serious or fatal injuries. This will also protect your warranty coverage for parts replaced under warranty.

NEVER LEAVE THE HEATER UNATTENDED WHILE BURNING!

Replacement Parts for RMC-LPC200 Series

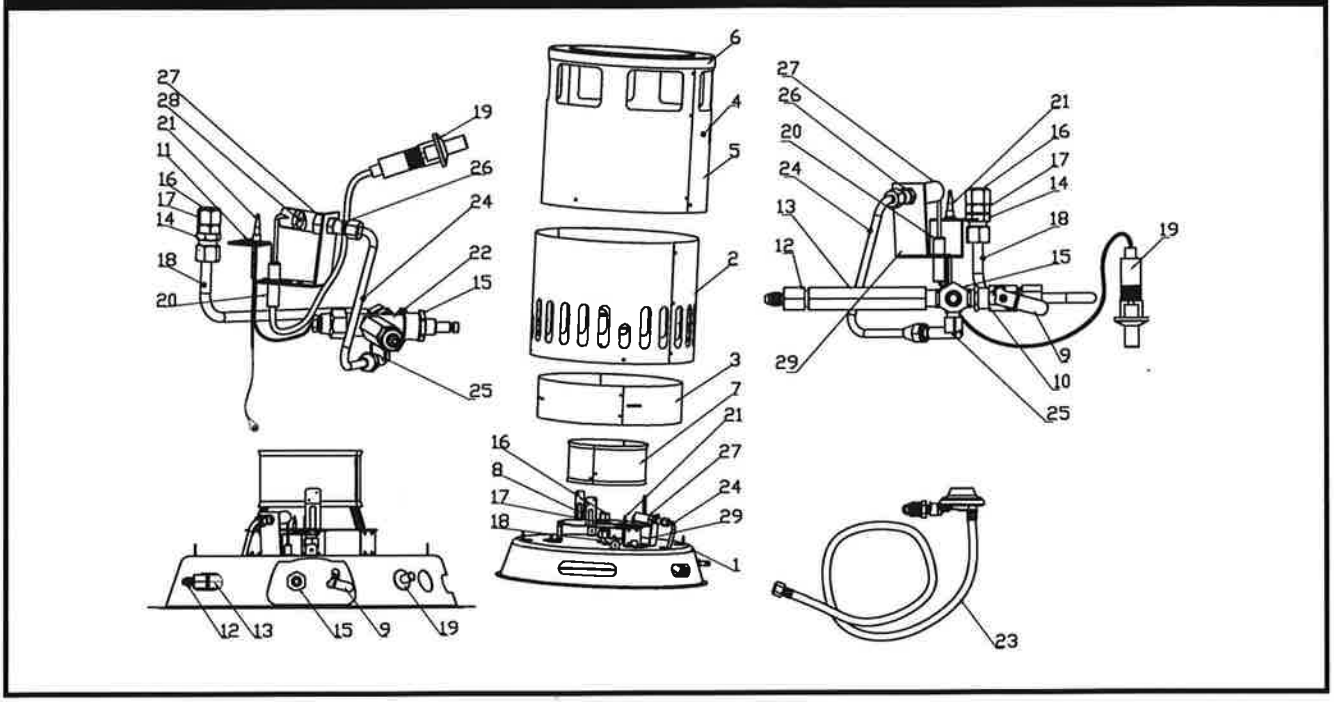

Replacement Parts List

GHP Group Inc., reserves the right to make changes in design, materials, specifications, prices and discontinue colors and products at any time, without notice.

Ref. No	Description	Quantity	RMC-LPC200
1.	Base	1	CFM200.00-01A
2.	Lower Shell	1	CFM200.00-03
3.	Inner Shell	1	CFM80.00-03
4.	Upper Shell Assy	1	CFM200.01
5.	Upper Shell	1	CFM200.01-01
6.	Cap	1	CFM80.01-02
7.	Burner Ring	1	SPC-80VCB.401
8.	Burner Bracket	1	CFM200.15-01
9.	Ball Valve Handle	1	CFM200.00-06
10.	Ball Valve Assy	1	GQ01
11.	Pilot Mounting	1	CFM80.00-05
12.	Inlet Fitting	1	CFM200.00-02
13.	Gas Inlet Tube	1	CFM200.00-010
14.	Fix Nut	1	CFM80.00-07
15.	Valve Fix Nut	1	SPC35.07-07B
16.	Nozzle	1	CFM200.00.04
17.	Nozzle Holder	1	CFM80.00-09
18.	Main Gas Tubing	1	CFM200.02
19.	Ignition Control	1	SPC694
20.	Ignitor Electrode	1	CFM200.14
21.	Thermocouple	1	1130/1496-210
22.	Control Valve	1	GS16
23.	Regulator & Hose Assy 10' (3.05 m)	1	GR-108 (POL-3000)
	Regulator & Hose Assy 15' (4.57 m)	1	GR-108 (POL-4600)
24.	Pilot Tubing	1	CFM200.10.00
25.	Elbow Fitting	1	SPC80VCB.105
26.	Pilot Nozzle	1	CFM200.11
27.	Pilot Tube	1	CFM200.12
28.	Pilot Burner Head	1	SPC-225VCB.132
29.	Pilot Mounting	1	CFM200.13
	AVAILABLE PARTS NOT SHOWN		
30.	Screw	17	ST4.2*8

WARNING: Use only original replacement parts. This heater must use design-specific parts. Do not substitute or use generic parts. Improper replacement parts could cause serious or fatal injuries. This will also protect your warranty coverage for parts replaced under warranty.